# Test Report



## CE EMC

for

**Product: Emergency car light**

**Model: MO8678**

**Report No: MG26E3060E**

Issued for

**Mid Ocean Brands B.V.**

**Unit 711-716, 7/F., Tower A, 83 King Lam Street Cheung Sha Wan, Kowloon, Hong Kong**

Issued by

**Guangdong MG Testing Technology Co., Ltd.**

**3rd Floor, Building 1, No.5, Jinzhong Road, Dongcheng Subdistrict, Dongguan, Guangdong, China.**

Scan to view the original file

**Guangdong MG Testing Technology Co., Ltd.**
Address: 3/F, Building 1, No.5, Jinzhong Road, Dongcheng Subdistrict, Dongguan, Guangdong, China
Tel: +86-0769-23320020 E-mail：service@mg-lab.cn Web：http://www.mg-lab.cn
This report is only responsible for the test results of the samples submitted for inspection, and is not responsible for the source of the samples submitted for inspection.
This report shall not be altered, increased or deleted. Without written approval of MG, this test report shall not be copied except in full and published as advertisement.

# TABLE OF CONTENTS

**1. TEST CERTIFICATION** ..... **3**
**2. TEST SUMMARY** ..... **4**
**3. TEST SITE** ..... **5**
*3.1. TEST FACILITY* ..... 5
*3.2. MEASUREMENT UNCERTAINTY* ..... 5
*3.3. LIST OF TEST AND MEASUREMENT INSTRUMENTS* ..... 5
**4. EUT DESCRIPTION** ..... **9**
**5. TEST METHODOLOGY** ..... **10**
*5.1. TEST MODE* ..... 10
5.2. *EUT SYSTEM OPERATION* ..... 10
**6. SETUP OF EQUIPMENT UNDER TEST** ..... **11**
*6.1. DESCRIPTION OF SUPPORT UNITS* ..... 11
*6.2. CONFIGURATION OF SYSTEM UNDER TEST* ..... 11
**7. EMISSION TEST** ..... **12**
*7.1. CONDUCTED EMISSION MEASUREMENT* ..... 12
*7.2. RADIATED ELECTROMAGNETIC DISTURBANCE* ..... 14
*7.3. RADIATED EMISSION MEASUREMENT* ..... 16
*7.4. HARMONICS CURRENT MEASUREMENT* ..... 20
*7.5. VOLTAGE FLUCTUATION AND FLICKS MEASUREMENT* ..... 22
**8. IMMUNITY TEST** ..... **23**
8.1. *GENERAL DESCRIPTION* ..... 23
*8.2. GENERAL PERFORMANCE CRITERIA DESCRIPTION* ..... 25
*8.3. ELECTROSTATIC DISCHARGE (ESD)* ..... 26
*8.4. RADIATED, RADIO-FREQUENCY, ELECTROMAGNETIC FIELD (RS)* ..... 29
*8.5. ELECTRICAL FAST TRANSIENT (EFT)* ..... 32
*8.6. SURGE IMMUNITY TEST* ..... 33
*8.7. CONDUCTED RADIO FREQUENCY DISTURBANCES (CS)* ..... 35
*8.8. POWER FREQUENCY MAGNETIC FIELD* ..... 36
*8.9. VOLTAGE DIP & VOLTAGE INTERRUPTIONS* ..... 38
**9. PHOTOGRAPHS OF THE TEST CONFIGURATION** ..... **39**
**10. PHOTOGRAPHS OF EUT** ..... **40**


This report is only responsible for the test results of the samples submitted for inspection, and is not responsible for the source of the samples submitted for inspection.
This report shall not be altered, increased or deleted. Without written approval of MG, this test report shall not be copied except in full and published as advertisement.

# 1. TEST CERTIFICATION

| | |
|---|---|
| Product: | Emergency car light |
| Trade marks: | N/A |
| Model: | MO8678 |
| Applicant : | Mid Ocean Brands B.V. |
| Address: | Unit 711-716, 7/F., Tower A, 83 King Lam Street Cheung Sha Wan, Kowloon, Hong Kong |
| Manufacturer: | Mid Ocean Brands B.V. |
| Address: | Unit 711-716, 7/F., Tower A, 83 King Lam Street Cheung Sha Wan, Kowloon, Hong Kong |
| Sample Received Date: | May 14, 2026 |
| Test Date: | May 14, 2026 to May 20, 2026 |
| Test Voltage: | DC 4.5V by battery |
| Applicable Standards: | EN IEC 55015:2019+A11:2020<br>EN IEC 61547:2023<br>EN IEC 61000-3-2:2019/A2:2024<br>EN 61000-3-3:2013/A2:2021/AC:2022-01 |
| Remark: | / |

The above equipment has been tested by Guangdong MG Testing Technology Co., Ltd. and found compliance with the requirements in the technical standards mentioned above. The test results presented in this report only relate to the product/system tested. The Other similar equipment will not necessarily produce the same results due to production tolerance and measurement uncertainties.

Test Engineer:

Aimee Gao / Engineer

Technical Manager:

Jason Zhan /Manager


This report is only responsible for the test results of the samples submitted for inspection, and is not responsible for the source of the samples submitted for inspection.
This report shall not be altered, increased or deleted. Without written approval of MG, this test report shall not be copied except in full and published as advertisement.

# 2. TEST SUMMARY

| EMISSION | | | |
|---|---|---|---|
| **Standard** | **Item** | **Result** | **Remarks** |
| EN IEC 55015:2019+A11:2020 | Conducted (Main Port) | N/A | Not applicable |
| | Radiated Electromagnetic Disturbance | N/A | Not applicable |
| | Radiated Emission | PASS | Complied with limit |
| EN IEC 61000-3-2:2019/A2:2024 | Harmonic current emissions | N/A | Not applicable |
| EN 61000-3-3:2013/A2:2021/AC: 2022-01 | Voltage fluctuations & flicker | N/A | Not applicable |

| IMMUNITY （EN IEC 61547:2023） | | | |
|---|---|---|---|
| **Standard** | **Item** | **Result** | **Remarks** |
| EN 61000-4-2:2009 | ESD | PASS | Complied with the requirements |
| EN IEC 61000-4-3:2020 | RS | PASS | Complied with the requirements |
| EN 61000-4-4:2012 | EFT | N/A | Not applicable |
| EN 61000-4-5:2014 +A1:2017 | Surge | N/A | Not applicable |
| EN 61000-4-6:2023 | CS | N/A | Not applicable |
| EN 61000-4-8:2010 | PFMF | N/A | Not applicable |
| EN IEC 61000-4-11:2020 | Voltage dips & voltage variations | N/A | Not applicable |

Note: 1) The test result verdict is decided by the limit of test standard

2) The information of measurement uncertainty is available upon the customer's request.


This report is only responsible for the test results of the samples submitted for inspection, and is not responsible for the source of the samples submitted for inspection.
This report shall not be altered, increased or deleted. Without written approval of MG, this test report shall not be copied except in full and published as advertisement.

# 3. TEST SITE

## 3.1. TEST FACILITY

Guangdong MG Testing Technology Co., Ltd.

Address: 3rd Floor, Building 1, No.5, Jinzhong Road, Dongcheng Subdistrict, Dongguan, Guangdong, China.

## 3.2. MEASUREMENT UNCERTAINTY

| Parameter | Uncertainty |
|---|---|
| Temperature | ±1°C |
| Humidity | ±5% |
| DC and Low Frequency Voltages | ±3% |
| Conducted Emission(150KHz-30MHz) | ±3.60dB |
| Radiated Emission(30MHz-1GHz) | ±4.76dB |
| Radiated Emission (1GHz-18GHz) | ±4.44dB |

Note 1: This uncertainty represents an expanded uncertainty expressed at approximately the 95% confidence level using a coverage factor of k=2.

## 3.3. LIST OF TEST AND MEASUREMENT INSTRUMENTS

### 3.3.1.For conducted emission at the mains terminals test

| Equipment | Manufacturer | Model | Equipment No. | Serial No. | Last Cal. | Cal.Interval |
|---|---|---|---|---|---|---|
| EMI Test Receiver | Rohde&Schwarz | ESCI | MG-EL-203 | 1166.5950.03-101142 | Mar. 02, 2026 | 1 Year |
| Pulse Limiter | Rohde&Schwarz | ESH3-Z2 | MG-EL-201 | 0357.8810.54-101857-hz | Mar. 02, 2026 | 1 Year |
| LISN | Rohde&Schwarz | ENV216 | MG-EL-202 | 3560.6550.12-103020-YU | Mar. 02, 2026 | 1 Year |
| Test software | Tonscend | JS32-CE Version 5.0.0 | | | | |


This report is only responsible for the test results of the samples submitted for inspection, and is not responsible for the source of the samples submitted for inspection.
This report shall not be altered, increased or deleted. Without written approval of MG, this test report shall not be copied except in full and published as advertisement.

### 3.3.2. For radiated emission test (9kHz-30MHz)

| Equipment | Manufacturer | Model | Equipment No. | Serial No. | Last Cal. | Cal.Interval |
|---|---|---|---|---|---|---|
| EMI Test Receiver | Rohde&Schwarz | ESCI | MG-EL-203 | 1166.5950.03-101142 | Mar. 02, 2026 | 1 Year |
| Three-ring antenna | Da Ze | ZN30401 | MG-EL-252 | / | May 16, 2026 | 1 Year |
| Test software | Tonscend | JS32-CE Version 5.0.0 | | | | |

### 3.3.3. For radiated emission test (30MHz-1GHz)

| Name of Equipment | Manufacturer | Model | Equipment | Serial No. | Last Cal. | Cal. Interval |
|---|---|---|---|---|---|---|
| EMI Test Receiver | Rohde&Schwarz | ESCI7 | MG-EL-205 | 1166.5950.03-100633 | Mar. 02, 2026 | 1 Year |
| Logarithmic periodic antenna | Schwarzbeck | VULB9168 | MG-EL-209 | 01145 | Mar. 06, 2025 | 3 Year |
| Preamplifier | HP | 8447F | MG-EL-210 | 1-18-53G22 | Mar. 02, 2026 | 1 Year |
| 3m Anechoic Chamber | Taihe MaoRui | 9*6*6 | MG-EL-234 | / | Oct. 09, 2024 | 5 Year |
| Test software | Tonscend | JS32-RE Version 5.0.0 | | | | |

### 3.3.4. For harmonic current emissions and voltage fluctuations/flicker test

| Name of Equipment | Manufacturer | Model | Equipment | Serial No. | Last Cal. | Cal. Interval |
|---|---|---|---|---|---|---|
| AC Power Source | California instruments | 5001i-400 | MG-EL-248 | 55979 | May 16, 2026 | 1 Year |
| Harmonic and Flicker Analyzer | California instruments | PACS-1 | MG-EL-249 | 72145 | May 16, 2026 | 1 Year |
| Test software | California Instruments | CTS 4 Version 4.32.0 | | | | |


This report is only responsible for the test results of the samples submitted for inspection, and is not responsible for the source of the samples submitted for inspection.
This report shall not be altered, increased or deleted. Without written approval of MG, this test report shall not be copied except in full and published as advertisement.

### 3.3.5. For electrostatic discharge immunity test

| Name of Equipment | Manufacturer | Model | Equipment | Serial No. | Last Cal. | Cal. Interval |
|---|---|---|---|---|---|---|
| ESD Tester | PRIMA | ESD61002TB | MG-EL-215 | PR9240625796 | Mar. 04, 2026 | 1 Year |

### 3.3.6. For radio frequency electromagnetic field immunity (R/S) test (DQT)

| Name of Equipment | Manufacturer | Model | Equipment | Serial No. | Last Cal. | Cal. Interval |
|---|---|---|---|---|---|---|
| Amplifier | Micotop | MPA-80-1000-250 | MG-EL-258 | MAP2503096 | May 16, 2026 | 1 Year |
| Amplifier | Micotop | MPA-1000-6000-100 | MG-EL-259 | MPA2503098 | May 18, 2026 | 1 Year |
| Power Meter | Agilent | E4417A | MG-EL-260 | GB41293356 | May 16, 2026 | 1 Year |
| Power Sensor | Agilent | E9304A | MG-EL-261 | MY55200008 | May 16, 2026 | 1 Year |
| Power Sensor | Agilent | E9304A | MG-EL-262 | MY55200004 | May 16, 2026 | 1 Year |
| Signal Generator | ROHDE&SCHWARZ | SMB100A | MG-EL-263 | 102913 | May 16, 2026 | 1 Year |
| Log-Per-Broadband Antenna | SKET | STLP 9129 PLUS | MG-EL-264 | / | May 19, 2025 | 3 Year |
| Audio Analyzer | ROHDE&SCHWARZ | UPP200 | MG-EL-267 | 120175 | May 16, 2026 | 1 Year |

### 3.3.7. For electrical fast transient/burst immunity test

| Name of Equipment | Manufacturer | Model | Equipment | Serial No. | Last Cal. | Cal. Interval |
|---|---|---|---|---|---|---|
| Fast Transient Burst Simulator | PRIMA | EFT61004TA | MG-EL-218 | PR9240743972 | Mar. 02, 2026 | 1 Year |
| Clamp | PRIMA | PEFT-C105 | MG-EL-219 | PEFT-1170 | Mar. 02, 2026 | 1 Year |


This report is only responsible for the test results of the samples submitted for inspection, and is not responsible for the source of the samples submitted for inspection.
This report shall not be altered, increased or deleted. Without written approval of MG, this test report shall not be copied except in full and published as advertisement.

### 3.3.8. For surge immunity test

| Name of Equipment | Manufacturer | Model | Equipment | Serial No. | Last Cal. | Cal. Interval |
|---|---|---|---|---|---|---|
| Lighting Surge Generator | PRIMA | SUG61005TB-2216 | MG-EL-217 | PR200854619 | Mar. 02, 2026 | 1 Year |
| Coupling/Decoupling Network | PRIMA | SUG-CDN-108 | MG-EL-216 | PR924105429 | Mar. 02, 2026 | 1 Year |

### 3.3.9. For injected currents susceptibility test

| Name of Equipment | Manufacturer | Model | Equipment | Serial No. | Last Cal. | Cal. Interval |
|---|---|---|---|---|---|---|
| CS Test system | TESEQ | NSG4070 | MG-EL-255 | 30608 | May 16, 2026 | 1 Year |
| 6dB Attenuator | TESEQ | ATN6075 | MG-EL-256 | 30783 | May 16, 2026 | 1 Year |
| CDN | TESEQ | CDN M016 | MG-EL-254 | 33518 | May 16, 2026 | 1 Year |
| EM-Clamp | TESEQ | KEMZ 801A | MG-EL-257 | 33425 | May 16, 2026 | 1 Year |

### 3.3.10. For power frequency magnetic field immunity test

| Equipment | Manufacturer | Model | Equipment No. | Serial No. | Last Cal. | Cal.Interval |
|---|---|---|---|---|---|---|
| POWER FREQUENCY MAGNETIC FIELD GENERATION | EVERFINE | EMS61000-8K | MG-EL-273 | 608002 | May 15, 2026 | 1 Year |

### 3.3.11. For voltage dips and short interruptions immunity test

| Name of Equipment | Manufacturer | Model | Equipment | Serial No. | Last Cal. | Cal. Interval |
|---|---|---|---|---|---|---|
| Cycle Sag Simulator | PRIMA | DRP61011TB | MG-EL-220 | PR924086817 | Mar. 02, 2026 | 1 Year |


This report is only responsible for the test results of the samples submitted for inspection, and is not responsible for the source of the samples submitted for inspection.
This report shall not be altered, increased or deleted. Without written approval of MG, this test report shall not be copied except in full and published as advertisement.

# 4. EUT DESCRIPTION

| | |
|---|---|
| **Product** | Emergency car light |
| **Main Model** | MO8678 |
| **Supplied Voltage** | DC 4.5V by battery |
| **Power** | -- |

**I/O PORT**

| I/O PORT TYPES | Q'TY | TESTED WITH |
|---|---|---|
| AC Port | 1 | ☐ |
| DC Port | 1 | ☒ |

**Models Difference**

N/A


This report is only responsible for the test results of the samples submitted for inspection, and is not responsible for the source of the samples submitted for inspection.
This report shall not be altered, increased or deleted. Without written approval of MG, this test report shall not be copied except in full and published as advertisement.

# 5. TEST METHODOLOGY

## 5.1. *TEST MODE*

The EUT was tested together with the thereinafter additional components, and a configuration, which produced the worst emission levels, was selected and recorded in this report.

The following test mode(s) were assessed.

| Test Items | | Test Mode |
|---|---|---|
| Emission | Conducted Emission | N/A |
| | Radiated Electromagnetic Disturbance | N/A |
| | Radiated Emission | Lighting |
| | Harmonic current emissions | N/A |
| | Voltage fluctuations & flicker | N/A |
| Immunity | ESD | Lighting |
| | RS | Lighting |
| | EFT | N/A |
| | Surge | N/A |
| | C/S | N/A |
| | M/S | N/A |
| | Dips | N/A |

## 5.2. *EUT SYSTEM OPERATION*

1. Set up EUT with the support equipment.
2. Make sure the EUT work normally during the test.


This report is only responsible for the test results of the samples submitted for inspection, and is not responsible for the source of the samples submitted for inspection.
This report shall not be altered, increased or deleted. Without written approval of MG, this test report shall not be copied except in full and published as advertisement.

# 6. SETUP OF EQUIPMENT UNDER TEST

## *6.1. DESCRIPTION OF SUPPORT UNITS*

The EUT has been tested as an independent unit together with other necessary accessories or support units. The following support units or accessories were used to form a representative test configuration during the tests.

| No. | Equipment | Model | Serial No. | FCC ID | Trade Name | Data Cable | Power Cord |
|---|---|---|---|---|---|---|---|
| 1. | N/A | N/A | N/A | N/A | N/A | N/A | N/A |

Note: 1) All the equipment/cables were placed in the worst-case configuration to maximize the emission during the test.

2) Grounding was established in accordance with the manufacturer's requirements and conditions for the intended use.

## *6.2. CONFIGURATION OF SYSTEM UNDER TEST*

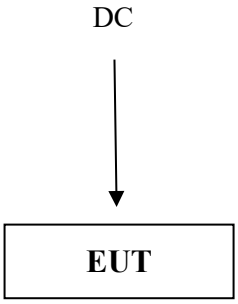


(EUT: Emergency car light )


This report is only responsible for the test results of the samples submitted for inspection, and is not responsible for the source of the samples submitted for inspection.
This report shall not be altered, increased or deleted. Without written approval of MG, this test report shall not be copied except in full and published as advertisement.

# 7. EMISSION TEST

## *7.1. CONDUCTED EMISSION MEASUREMENT*

### 7.1.1.LIMITS

| FREQUENCY (MHz) | LIMITS(dBμV) | |
|---|---|---|
| | Quasi-peak | Average |
| 0.009-0.05 | 110 | N/A |
| 0.05-0.15 | 90 – 80 | N/A |
| 0.15 - 0.5 | 66 – 56 | 56 - 46 |
| 0.50 - 5.0 | 56 | 46 |
| 5.0 - 30.0 | 60 | 50 |

Note: 1) The lower limit shall apply at the transition frequencies.
2) The limit decreases in line with the logarithm of the frequency in the range of 0.15 MHz to 0.5 MHz

### 7.1.2.TEST PROCEDURES

The EUT and Support equipment, if needed, was set up as per the test configuration to simulate typical usage per the user's manual. When the EUT is a tabletop system, a wooden table with a height of 0.8 meters is used and is placed on the ground plane. When the EUT is floor standing equipment, it is placed on the ground plane, which has a 3-12 mm non-conductive covering to insulate the EUT from the ground plane. The EUT should be 0.8 m apart from the AMN, where the mains cable supplied by the manufacturer is longer than 0.8 m, the excess should be folded at the centre into a bundle no longer than 0.4 m, Details please refer to test setup photography.

The Receiver scanned from 9 kHz to 30 MHz for emissions in each of the test modes.
During the above scans, the emissions were maximized by cable manipulation.

A scanning was taken on the power lines, Line and neutral, recording at least six highest emissions. Emission frequency and amplitude were recorded into a computer in which correction factors were used to calculate the emission level and compare reading to the applicable limit. The test data of the worst-case condition(s) was recorded.
Note: Test Software Name: e3, Software Version: 1.0.0.0.


This report is only responsible for the test results of the samples submitted for inspection, and is not responsible for the source of the samples submitted for inspection.
This report shall not be altered, increased or deleted. Without written approval of MG, this test report shall not be copied except in full and published as advertisement.

### 7.1.3.TEST SETUP

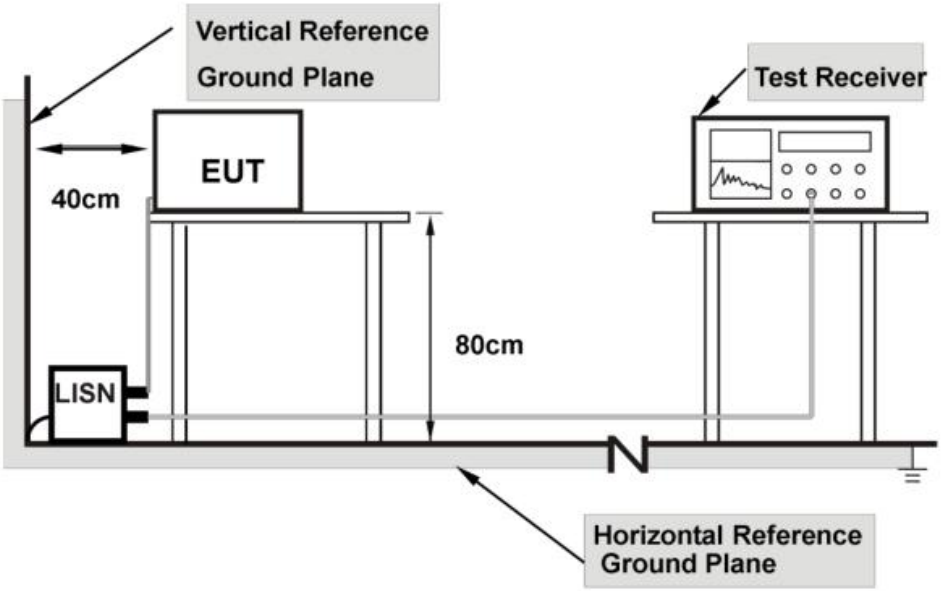


Note: 1.Support units were connected to second LISN.

2.Both of LISNs(AMN) are 80 cm from EUT and at least 80 from other units and other metal planes

### 7.1.4.TEST RESULT

N/A


This report is only responsible for the test results of the samples submitted for inspection, and is not responsible for the source of the samples submitted for inspection.
This report shall not be altered, increased or deleted. Without written approval of MG, this test report shall not be copied except in full and published as advertisement.

## *7.2. RADIATED ELECTROMAGNETIC DISTURBANCE*

### 7.2.1.LIMITS

| Frequency | Limits for loop diameter dB(μA)* | | |
|---|---|---|---|
| | 2 m | 3 m | 4 m |
| 9 kHz-70 kHz | 88 | 81 | 75 |
| 70 kHz-150 kHz | 88-58** | 81-51** | 75-45** |
| 150 kHz-3.0 MHz | 58-22** | 51-22** | 45-16** |
| 3.0 MHz-30 MHz | 22 | 15-16*** | 9-12*** |
| * At the transition frequency, the lower limit applies.<br>** Decreasing linearly with the logarithm of the frequency.<br>*** Increasing linearly with the logarithm of the frequency. | | | |

### 7.2.2.TEST PROCEDURE

The EUT and support equipment are positioned in the centre of loop antenna system (LAS). The LAS consists of three circular, mutually perpendicular large-loop antennas (LLAs), having a diameter of 2 m, supported by a non-metallic base. A 50 Ω coaxial cable between the current probe of an LLA and the coaxial switch, and between this switch and the measuring equipment, shall have surface transfer impedance smaller than 10 mΩ/m at 100 kHz and 1 mΩ/m at 10 MHz. The distance between the outer diameter of the loop antenna system and nearby objects, such as floor and walls, shall be at least 0.5 m as per CISPR 15/ EN 55015.

The induced current in the loop antenna is measured by means of a current probe (1 V/A) and the CISPR measuring receiver. By means of a coaxial switch, the three field directions (X, Y, Z) can be measured in sequence.

The receiver scanned from 9 kHz to 30 MHz for emissions in each of the test modes, and recorded at least the six highest emissions. Each value shall comply with the requirement given.

The test data of the worst-case condition(s) was recorded.
Note: Test Software Name: e3, Software Version: 1.0.0.0.


This report is only responsible for the test results of the samples submitted for inspection, and is not responsible for the source of the samples submitted for inspection.
This report shall not be altered, increased or deleted. Without written approval of MG, this test report shall not be copied except in full and published as advertisement.

### 7.2.3.TEST SETUP

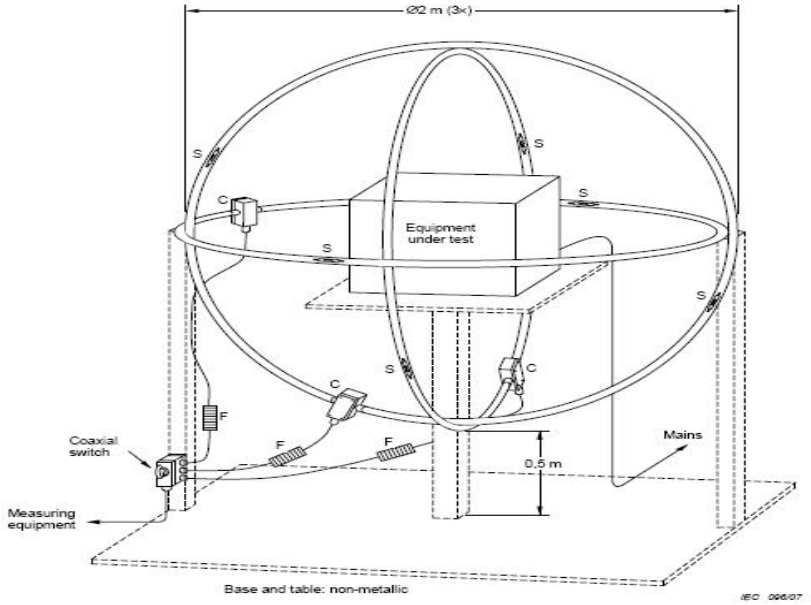


For the actual test configuration, please refer to the related item – Photographs of the Test Configuration.

### 7.2.4.TEST RESULT

N/A


This report is only responsible for the test results of the samples submitted for inspection, and is not responsible for the source of the samples submitted for inspection.
This report shall not be altered, increased or deleted. Without written approval of MG, this test report shall not be copied except in full and published as advertisement.

## *7.3. RADIATED EMISSION MEASUREMENT*

### 7.3.1.LIMITS

| FREQUENCY (MHz) | Limit (dBμV/m) (At 3 m) |
|---|---|
| 30 ~ 230 | 40 |
| 230 ~ 300 | 47 |

Note: 1) The lower limit shall apply at the transition frequencies.

2) Emission level (dBμV/m) = 20 log Emission level (μV/m).

### 7.3.2.TEST PROCEDURE

The equipment was set up as per the test configuration to simulate typical usage per the user's manual. When the EUT is a tabletop system, a wooden turntable with a height of 0.8 meters is used which is placed on the ground plane. When the EUT is floor standing equipment, it is placed on the ground plane which has a 3-12 mm non-conductive covering to insulate the EUT from the ground plane.

The antenna was placed at 3 meter away from the EUT. The antenna connected to the spectrum analyzer via a cable and at times a pre-amplifier would be used.

The analyzer / receiver quickly scanned from 30 MHz to 300 MHz. The EUT test program was started. Emissions were scanned and measured rotating the EUT to 360 degrees and positioning the antenna 1 to 4 meters above the ground plane, in both the vertical and the horizontal polarization, to maximize the emission reading level.

During the above scans, the emissions were maximized by cable manipulation. Each modes is measured, recorded at least the six highest emissions. Emission frequency, amplitude, antenna position, polarization and turntable position were recorded into a computer in which correction factors were used to calculate the emission level and compare reading to the applicable limit and only Q.P. reading is presented.

The test data of the worst-case condition(s) was recorded.

Note: Test Software Name: e3, Software Version: 8.2.1.0.


This report is only responsible for the test results of the samples submitted for inspection, and is not responsible for the source of the samples submitted for inspection.
This report shall not be altered, increased or deleted. Without written approval of MG, this test report shall not be copied except in full and published as advertisement.

### 7.3.3.TEST SETUP

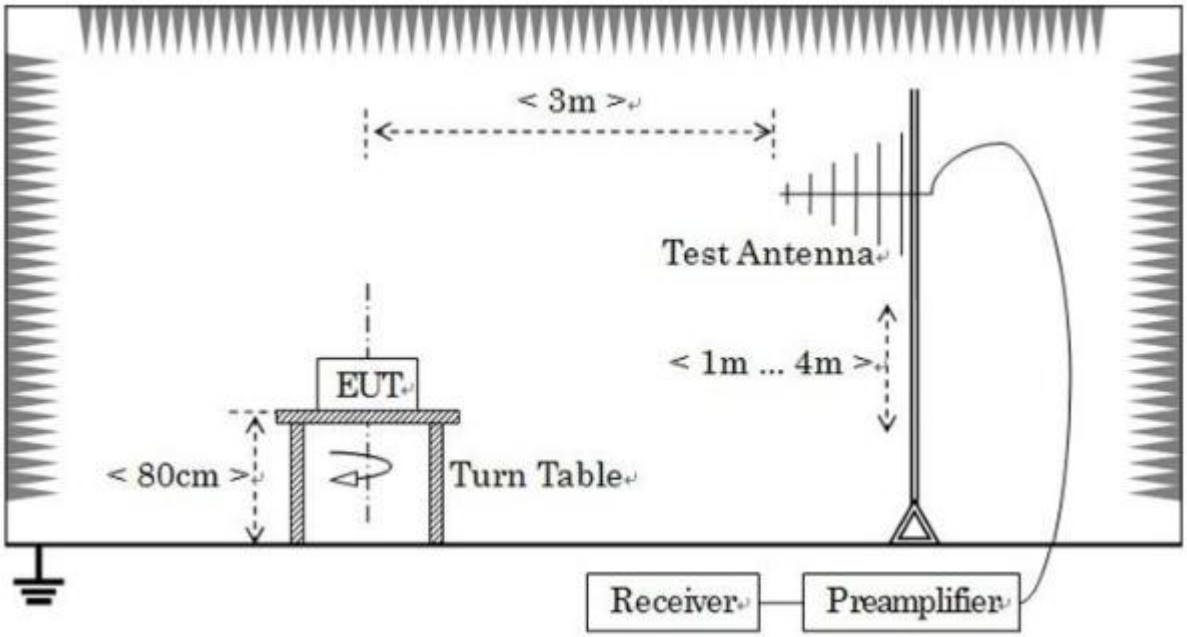


Note: For the actual test configuration, please refer to the related item – Photographs of the Test Configuration

### 7.3.4.TEST RESULT

| Product name | Emergency car light | Antenna Distance | 3 m |
|---|---|---|---|
| Model | MO8678 | Antenna Pole | Vertical / Horizontal |
| Test Mode | Lighting | Detector Function | Quasi-peak |
| Environmental Conditions | 25℃, 54 % RH, 101.2 kPa | 6 dB Bandwidth | 120 kHz |
| Tested by | Brian | Test Result | Pass |

Note:
Freq. = Emission frequency in MHz
Reading level (dBμV) = Receiver reading(dBμV)
Corr.Factor (dB/m)=Antenna factor(dB/m)+Cable loss(dB)-Preamp Factor(dB)
Measurement (dBμV/m)=Reading level(dBμV)+ Corr. Factor (dB/m)
Limit (dBμV/m) = Limit stated in standard
Over Limit (dB) = Measurement (dBμV/m) – Limit (dBμV/m)
QP = Quasi-Peak


This report is only responsible for the test results of the samples submitted for inspection, and is not responsible for the source of the samples submitted for inspection.
This report shall not be altered, increased or deleted. Without written approval of MG, this test report shall not be copied except in full and published as advertisement.

Please refer to the following diagram:

Vertical:

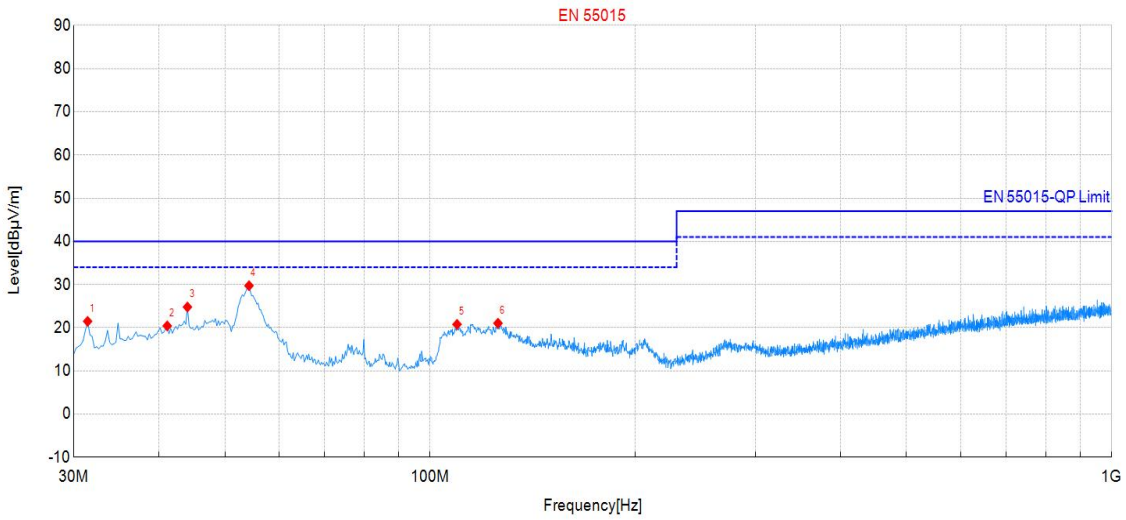


| Suspected Data List | | | | | | | | | | | |
|---|---|---|---|---|---|---|---|---|---|---|---|
| NO. | Frequency [MHz] | Reading [dBµV] | Level [dBµV/m] | Factor [dB/m] | Limit [dBµV/m] | Margin [dB] | Height [cm] | Angle [°] | Det | Pol | Verdict |
| 1 | 31.46 | 39.19 | 21.49 | -17.70 | 40.00 | 18.51 | 100 | 344 | QP | Vert | PASS |
| 2 | 41.16 | 37.46 | 20.43 | -17.03 | 40.00 | 19.57 | 100 | 308 | QP | Vert | PASS |
| 3 | 44.07 | 41.89 | 24.80 | -17.09 | 40.00 | 15.20 | 100 | 147 | QP | Vert | PASS |
| 4 | 54.25 | 47.30 | 29.74 | -17.56 | 40.00 | 10.26 | 100 | 354 | QP | Vert | PASS |
| 5 | 109.54 | 39.68 | 20.78 | -18.90 | 40.00 | 19.22 | 100 | 36 | QP | Vert | PASS |
| 6 | 125.79 | 38.41 | 21.04 | -17.37 | 40.00 | 18.96 | 100 | 26 | QP | Vert | PASS |

Note:(1)Level=Reading+Factor

(2)Margin=Limit-Level


This report is only responsible for the test results of the samples submitted for inspection, and is not responsible for the source of the samples submitted for inspection.
This report shall not be altered, increased or deleted. Without written approval of MG, this test report shall not be copied except in full and published as advertisement.

Horizontal:

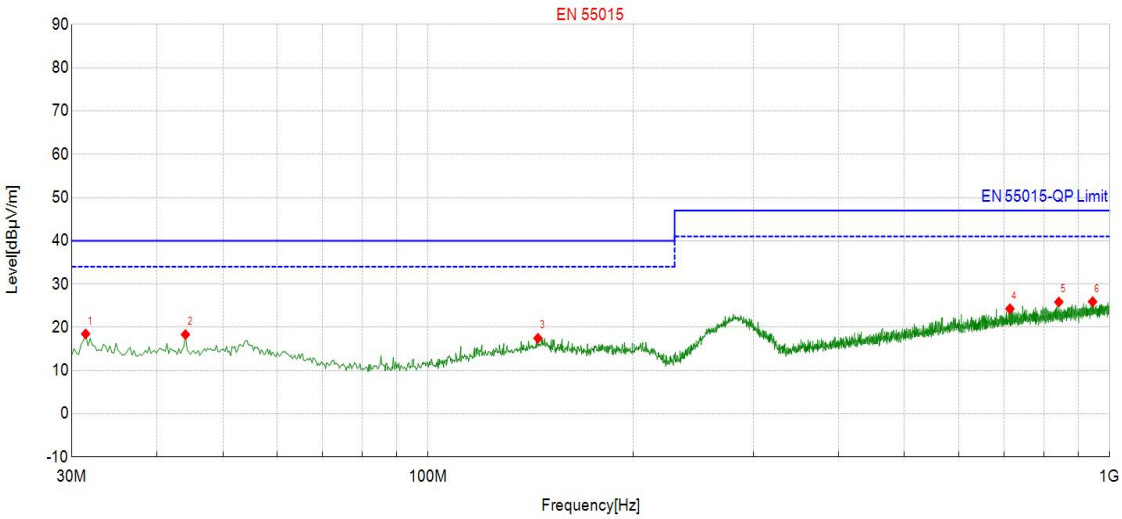


| Suspected Data List | | | | | | | | | | | |
|---|---|---|---|---|---|---|---|---|---|---|---|
| NO. | Frequency [MHz] | Reading [dBµV] | Level [dBµV/m] | Factor [dB/m] | Limit [dBµV/m] | Margin [dB] | Height [cm] | Angle [°] | Det | Pol | Verdict |
| 1 | 31.46 | 36.17 | 18.47 | -17.70 | 40.00 | 21.53 | 100 | 306 | QP | Hori | PASS |
| 2 | 44.07 | 35.41 | 18.32 | -17.09 | 40.00 | 21.68 | 100 | 72 | QP | Hori | PASS |
| 3 | 144.95 | 33.74 | 17.47 | -16.27 | 40.00 | 22.53 | 100 | 100 | QP | Hori | PASS |
| 4 | 713.85 | 32.97 | 24.29 | -8.68 | 47.00 | 22.71 | 100 | 6 | QP | Hori | PASS |
| 5 | 842.13 | 33.46 | 25.85 | -7.61 | 47.00 | 21.15 | 100 | 269 | QP | Hori | PASS |
| 6 | 943.98 | 32.78 | 25.92 | -6.86 | 47.00 | 21.08 | 100 | 316 | QP | Hori | PASS |

Note:(1)Level=Reading+Factor

(2)Margin=Limit-Level


This report is only responsible for the test results of the samples submitted for inspection, and is not responsible for the source of the samples submitted for inspection.
This report shall not be altered, increased or deleted. Without written approval of MG, this test report shall not be copied except in full and published as advertisement.

## *7.4. HARMONICS CURRENT MEASUREMENT*

### 7.4.1.LIMITS OF HARMONICS CURRENT MEASUREMENT

| Limit for Class A equipment | |
|---|---|
| Harmonics Order N | Max. permissible harmonics current A |
| Odd harmonics | |
| 3 | 2.30 |
| 5 | 1.14 |
| 7 | 0.77 |
| 9 | 0.40 |
| 11 | 0.33 |
| 13 | 0.21 |
| 15≦n≦39 | 0.15x(15/n) |
| Even harmonics | |
| 2 | 1.08 |
| 4 | 0.43 |
| 6 | 0.30 |
| 8≦n≦40 | 0.23x8/n |

| Limit for Class D equipment | | |
|---|---|---|
| Harmonics Order n | Max. permissible harmonics current per watt mA/W | Max. permissible harmonics current A |
| Odd Harmonics only | | |
| 3 | 3.4 | 2.30 |
| 5 | 1.9 | 1.14 |
| 7 | 1.0 | 0.77 |
| 9 | 0.5 | 0.40 |
| 11 | 0.35 | 0.33 |
| 13 | 0.30 | 0.21 |
| 15≦n≦39 (odd harmonics only) | 3.85/n | 0.15x(15/n) |
| | | |
| | | |
| | | |
| | | |

| Limit for Class C equipment | |
|---|---|
| Harmonics Order n | Max. permissible harmonics current expressed as a percentage of the input current at the fundamental frequency A |
| 2 | 2 |
| 3 | 30xF |
| 5 | 10 |
| 7 | 7 |
| 9 | 5 |
| 11≦n<≦39 (odd harmonics only) | 3 |
| F is the circuit power factor | |


This report is only responsible for the test results of the samples submitted for inspection, and is not responsible for the source of the samples submitted for inspection.
This report shall not be altered, increased or deleted. Without written approval of MG, this test report shall not be copied except in full and published as advertisement.

Note: Class A, B, C and D are classified according to item 7.4.2.of this report

### 7.4.2. TEST PROCEDURES

The EUT was placed on the top of a wooden table 0.8 meters above the ground and operated to produce the maximum harmonic. The classification of EUT is according to section 5 of EN 61000-3-2.
The EUT is classified as follows:
Class A:
Balanced three-phase equipment, Household appliances excluding equipment as Class D, Tools excluding portable tools, Dimmers for incandescent lamps, audio equipment, equipment not specified in one of the three other classes.
Class B:
Portable tools; Arc welding equipment which is not professional equipment.
Class C:
Lighting equipment
Class D:
Equipment having a specified power less than or equal to 600 W of the following types: Personal computers and personal computer monitors and television receivers.
The correspondent test program of test instrument to measure the current harmonics emanated from EUT is chosen.
The measure time shall be not less than the time necessary for the EUT to be exercised.

### 7.4.3.TEST SETUP

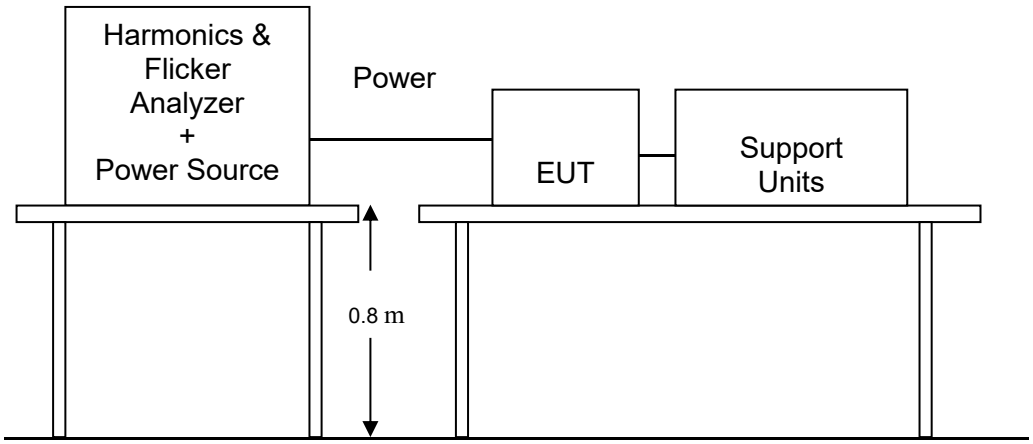


For the actual test configuration, please refer to the related item – Photographs of the Test Configuration.

### 7.4.4.TEST RESULT

N/A


This report is only responsible for the test results of the samples submitted for inspection, and is not responsible for the source of the samples submitted for inspection.
This report shall not be altered, increased or deleted. Without written approval of MG, this test report shall not be copied except in full and published as advertisement.

## *7.5. VOLTAGE FLUCTUATION AND FLICKS MEASUREMENT*

### 7.5.1.LIMITS OF VOLTAGE FLUCTUATION AND FLICKS MEASUREMENT

| TEST ITEM | LIMIT | REMARK |
|---|---|---|
| $P_{st}$ | 1.0 | $P_{st}$ means short-term flicker indicator. |
| $P_{lt}$ | 0.65 | $P_{lt}$ means long-term flicker indicator. |
| $T_{dt}$ (ms) | 500 | $T_{dt}$ means maximum time that dt exceeds 3 %. |
| $d_{max}$ (%) | 4/6/7 % | $d_{max}$ means maximum relative voltage change. |
| dc (%) | 3.3 % | dc means relative steady-state voltage change |

### 7.5.2.TEST PROCEDURE

The EUT was placed on the top of a wooden table 0.8 meters above the ground and operated to produce the most unfavorable sequence of voltage changes under lighting operating conditions.
During the flick measurement, the measure time shall include that part of whole operation cycle in which the EUT produce the most unfavorable sequence of voltage changes. The observation period for short-term flicker indicator is 10 minutes and the observation period for long-term flicker indicator is 2 hours.

### 7.5.3.TEST SETUP

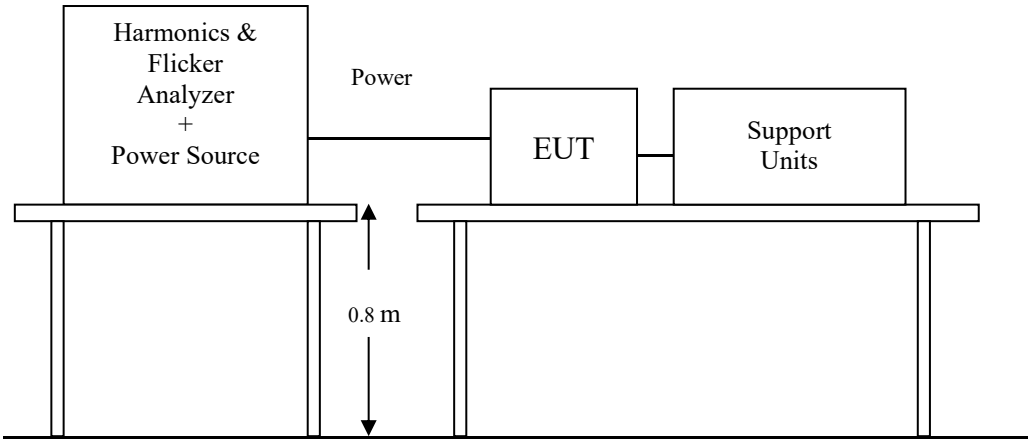


For the actual test configuration, please refer to the related item – Photographs of the Test Configuration.

### 7.5.4.TEST RESULT

N/A


This report is only responsible for the test results of the samples submitted for inspection, and is not responsible for the source of the samples submitted for inspection.
This report shall not be altered, increased or deleted. Without written approval of MG, this test report shall not be copied except in full and published as advertisement.

# 8. IMMUNITY TEST

## 8.1. *GENERAL DESCRIPTION*

| Product Standard | EN 61547 | |
|---|---|---|
| | **Test Type** | **Minimum Requirement** |
| **Basic Standard, Specification, and Performance Criterion required** | EN 61000-4-2 | Electrostatic Discharge – ESD:<br>±8 kV air discharge, ±4 kV Contact discharge,<br>Road and street lighting equipment<br>±15 kV air discharge, ±8kV Contact discharge,<br><br>Performance Criterion B |
| | EN 61000-4-3 | Radio-Frequency Electromagnetic Field<br>Susceptibility Test – RS:<br>80 ~1000 MHz, 3 V/m, 80 % AM(1 kHz),<br>Performance Criterion A |
| | EN 61000-4-4 | Electrical Fast Transient/Burst - EFT,<br>AC Power line: ±1 kV, DC Power line ±0.5 kV,Signal line: ±0.5 kV,<br>Performance Criterion B |
| | EN 61000-4-5 | Surge Immunity Test:<br>1.2/50 µs Open Circuit Voltage,<br>8 /20 µs Short Circuit Current,<br>AC Power Port ~ Line to line: ±0.5 kV, Line to ground: N/A<br>( to self-ballasted lamps and semi-luminaries; luminaires and independent auxiliaries which are less than or equal to 25 W)<br>AC Power Port ~ Line to line: ±1 kV, Line to ground: ±2 kV<br>(to luminaires and independent auxiliaries which are more than 25 W)<br>Road and street lighting equipment~ Line to line: ±2 kV, Line to ground: ±4 kV<br>Performance Criterion C |
| | EN 61000-4-6 | Conducted Radio Frequency Disturbances Test –CS:<br>0.15 ~ 80 MHz, 3 Vrms, 80 % AM, 1 kHz,<br>Performance Criterion A |
| | EN 61000-4-8 | Power frequency magnetic field immunity test<br>50/60Hz, 3 A/m<br>Performance Criterion A |


This report is only responsible for the test results of the samples submitted for inspection, and is not responsible for the source of the samples submitted for inspection.
This report shall not be altered, increased or deleted. Without written approval of MG, this test report shall not be copied except in full and published as advertisement.

| | | |
|---|---|---|
| | EN 61000-4-11 | Voltage Dips and Interruptions:<br>i) 30 % reduction for 10 period,<br>Performance Criterion B<br>Voltage Dips and Interruptions:<br>ii) 100 % reduction for 0.5 period<br>Performance Criterion B |


This report is only responsible for the test results of the samples submitted for inspection, and is not responsible for the source of the samples submitted for inspection.
This report shall not be altered, increased or deleted. Without written approval of MG, this test report shall not be copied except in full and published as advertisement.

## *8.2. GENERAL PERFORMANCE CRITERIA DESCRIPTION*

| | |
|---|---|
| **Criteria A:** | During the test no change of the luminous intensity shall be observed and the regulating control, if any, shall operate during the test as intended. |
| **Criteria B:** | During the test the luminous intensity may change to any value. After the test the luminous intensity shall be restored to its initial value within 1 min(30 min for highpressure gas discharge lamps).<br>Regulating controls need not function during the test, but after the test the mode of the control shall be the same as before the test provided that during the test no mode changing commands were given. |
| **Criteria C:** | During and after the test any change of the luminous intensity is allowed and the lamp(s) may be extinguished. After the test, within 30 min, all functions shall return to normal. if necessary by temporary interruption of the mains supply and/or operating the regulating control. |


This report is only responsible for the test results of the samples submitted for inspection, and is not responsible for the source of the samples submitted for inspection.
This report shall not be altered, increased or deleted. Without written approval of MG, this test report shall not be copied except in full and published as advertisement.

## *8.3. ELECTROSTATIC DISCHARGE (ESD)*

### 8.3.1.TEST SPECIFICATION

| | |
|---|---|
| **Basic Standard:** | EN 61000-4-2 |
| **Discharge Impedance:** | 330 Ω |
| **Charging Capacity:** | 150 pF |
| **Discharge Voltage:** | Air Discharge: ±8 kV (Direct)<br>Contact Discharge: ±4 kV (Direct/Indirect)<br>Other :Road and street lighting equipment<br>Air Discharge: ±15 kV (Direct)<br>Contact Discharge: ±8 kV (Direct/Indirect) |
| **Polarity:** | Positive & Negative |
| **Number of Discharge:** | 10 times at each test point |
| **Discharge Mode:** | 1 time/s |
| **Performance Criterion:** | B |

### 8.3.2.TEST PROCEDURE

The discharges shall be applied in two ways:

a) Contact discharges to the conductive surfaces and coupling planes:

Twenty dischargers (10 with positive and 10 with negative polarity) shall be applied on each accessible metallic part of the enclosure, terminals are excluded. In case of a non-conductive enclosure, dischargers shall be applied on the horizontal or vertical coupling planes. Test shall be performed at a maximum repetition rate of one discharge per second.

b) Air discharges at slots and apertures and insulating surfaces:

On those parts of the EUT where it is not possible to perform contact discharge testing, the equipment should be investigated to identify user accessible points where breakdown may occur. Such points are tested using the air discharge method. This investigation should be restricted to those area normally handled by the user. A minimum of 10 single air discharges shall be applied to the selected test point for each such area.

The basic test procedure was in accordance with IEC 61000-4-2:

a) The EUT was located 0.1 m minimum from all side of the HCP (dimensions 1.6 m x 0.8 m).

b) The support units were located another table 30 cm away from the EUT, but direct support unit was/were located at same location as EUT on the HCP and keep at a distance of 10cm with EUT.

c) The time interval between two successive single discharges was at least 1 second.


This report is only responsible for the test results of the samples submitted for inspection, and is not responsible for the source of the samples submitted for inspection.
This report shall not be altered, increased or deleted. Without written approval of MG, this test report shall not be copied except in full and published as advertisement.

d) Contact discharges were applied to the non-insulating coating, with the pointed tip of the generator penetrating the coating and contacting the conducting substrate.

e) Air discharges were applied with the round discharge tip of the discharge electrode approaching the EUT as fast as possible (without causing mechanical damage) to touch the EUT. After each discharge, the ESD generator was removed from the EUT and re-triggered for a new single discharge. The test was repeated until all discharges were complete.

f) At least ten single discharges (in the most sensitive polarity) were applied at the front edge of each HCP opposite the center point of each unit of the EUT and 0.1 meters from the front of the EUT. The long axis of the discharge electrode was in the plane of the HCP and perpendicular to its front edge during the discharge.

g) At least ten single discharges (in the most sensitive polarity) were applied to the center of one vertical edge of the Vertical Coupling Plane (VCP) in sufficiently different positions that the four faces of the EUT were completely illuminated. The VCP (dimensions 0.5 m x 0.5 m) was placed vertically to and 0.1 meters from the EUT.

### 8.3.3.TEST SETUP

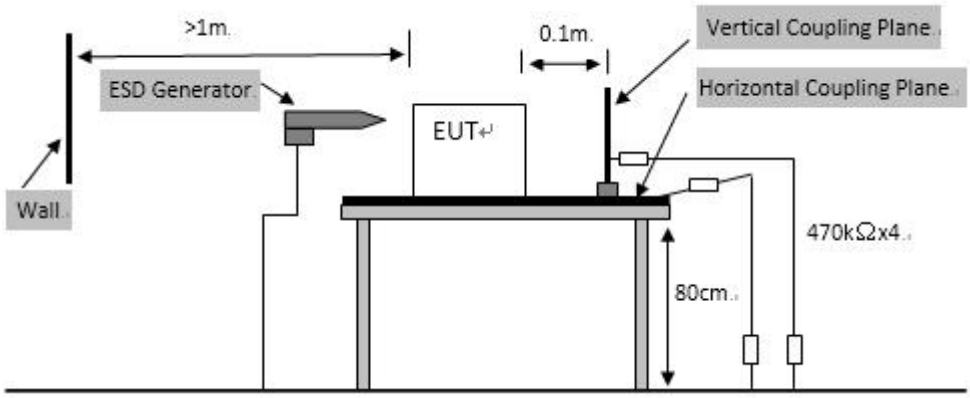


For the actual test configuration, please refer to the related item – Photographs of the Test Configuration.

Note:
1) TABLE-TOP EQUIPMENT
The configuration consisted of a wooden table 0.8 meters high standing on the ground reference plane (GRP) . The GRP consisted of a sheet of aluminum at least 0.25 mm thick, and 2.5 meters square connected to the protective grounding system. A horizontal coupling plane (HCP) (1.6 m x 0.8 m) was placed on the table and attached to the GRP by means of a cable with 940k total impedance. The equipment under test, was installed in a representative system as described in section 7 of EN 61000-4-2, and its cables were placed on the HCP and isolated by an insulating support of 0.5 mm thickness. A distance of 1-meter minimum was provided


This report is only responsible for the test results of the samples submitted for inspection, and is not responsible for the source of the samples submitted for inspection.
This report shall not be altered, increased or deleted. Without written approval of MG, this test report shall not be copied except in full and published as advertisement.

between the EUT and the walls of the laboratory and any other metallic structure.

2) FLOOR-STANDING EQUIPMENT
The equipment under test was installed in a representative system as described in section 7 of IEC 61000-4-2, and its cables were isolated from the ground reference plane by an insulating support of 0.1 meter thickness. The GRP consisted of a sheet of aluminum that is at least 0.25 mm thick, and 2.5 meters square connected to the protective grounding system and extended at least 0.5 meters from the EUT on all sides.

### 8.3.4.TEST RESULT

| **Product** | Emergency car light | **Environmental Conditions** | 24°C, 53 % RH, 101.2 kPa |
|---|---|---|---|
| **Model** | MO8678 | **Tested By** | Brian |
| **Test mode** | Lighting | **Test Result** | Pass |

| **Air Discharge** | | | | | |
|---|---|---|---|---|---|
| **Test Points** | **Test Levels** | **Results** | | | |
| | **± 8 kV** | **Pass** | **Fail** | **Observation** | **Performance Criterion** |
| LED | ☒ | ☒ | ☐ | Note ☐1☒2☐3 | B |
| Gap | ☒ | ☒ | ☐ | Note ☐1☒2☐3 | B |

| **Contact Discharge** | | | | | |
|---|---|---|---|---|---|
| **Test Points** | **Test Levels** | **Results** | | | |
| | **± 4 kV** | **Pass** | **Fail** | **Observation** | **Performance Criterion** |
| HCP 4 Points | ☒ | ☒ | ☐ | Note ☐1☒2☐3 | B |
| VCP 4 Points | ☒ | ☒ | ☐ | Note ☐1☒2☐3 | B |

Note**:** 1) There was no change compared with initial operation during the test.
2) During the test the luminous intensity change, and after the test the luminous intensity can be restored to its initial value within 1 min.
3) During the test, the luminous intensity change and after the test the luminous intensity can return to normal within 30 min.


This report is only responsible for the test results of the samples submitted for inspection, and is not responsible for the source of the samples submitted for inspection.
This report shall not be altered, increased or deleted. Without written approval of MG, this test report shall not be copied except in full and published as advertisement.

## *8.4. RADIATED, RADIO-FREQUENCY, ELECTROMAGNETIC FIELD (RS)*

### 8.4.1.TEST SPECIFICATION

| | |
|---|---|
| **Basic Standard:** | EN 61000-4-3 |
| **Frequency Range:** | 80 MHz ~ 1000 MHz |
| **Field Strength:** | 3 V/m |
| **Modulation:** | 1 kHz Sine Wave, 80 %, AM Modulation |
| **Frequency Step:** | 1 % of preceding frequency value |
| **Polarity of Antenna:** | Horizontal and Vertical |
| **Test Distance:** | 3 m |
| **Antenna Height:** | 1.5 m |
| **Performance Criterion:** | A |

### 8.4.2.TEST PROCEDURE

The test procedure was in accordance with EN 61000-4-3

a) The testing was performed in a fully anechoic chamber. The transmit antenna was located at a distance of 3 meters from the EUT.

b) The frequency range is swept from 80 MHz to 1000 MHz, with the signal 80% amplitude modulated with a 1 kHz sine-wave. The rate of sweep did not exceed 1.5 x $10^{-3}$ decade/s, where the frequency range is swept incrementally, the step size was 1 % of preceding frequency value.
c) The dwell time at each frequency shall be not less than the time necessary for the EUT to be able to respond.
d) The test was performed with the EUT exposed to both vertically and horizontally polarized fields on each of the four sides.


This report is only responsible for the test results of the samples submitted for inspection, and is not responsible for the source of the samples submitted for inspection.
This report shall not be altered, increased or deleted. Without written approval of MG, this test report shall not be copied except in full and published as advertisement.

**8.4.3.TEST SETUP**

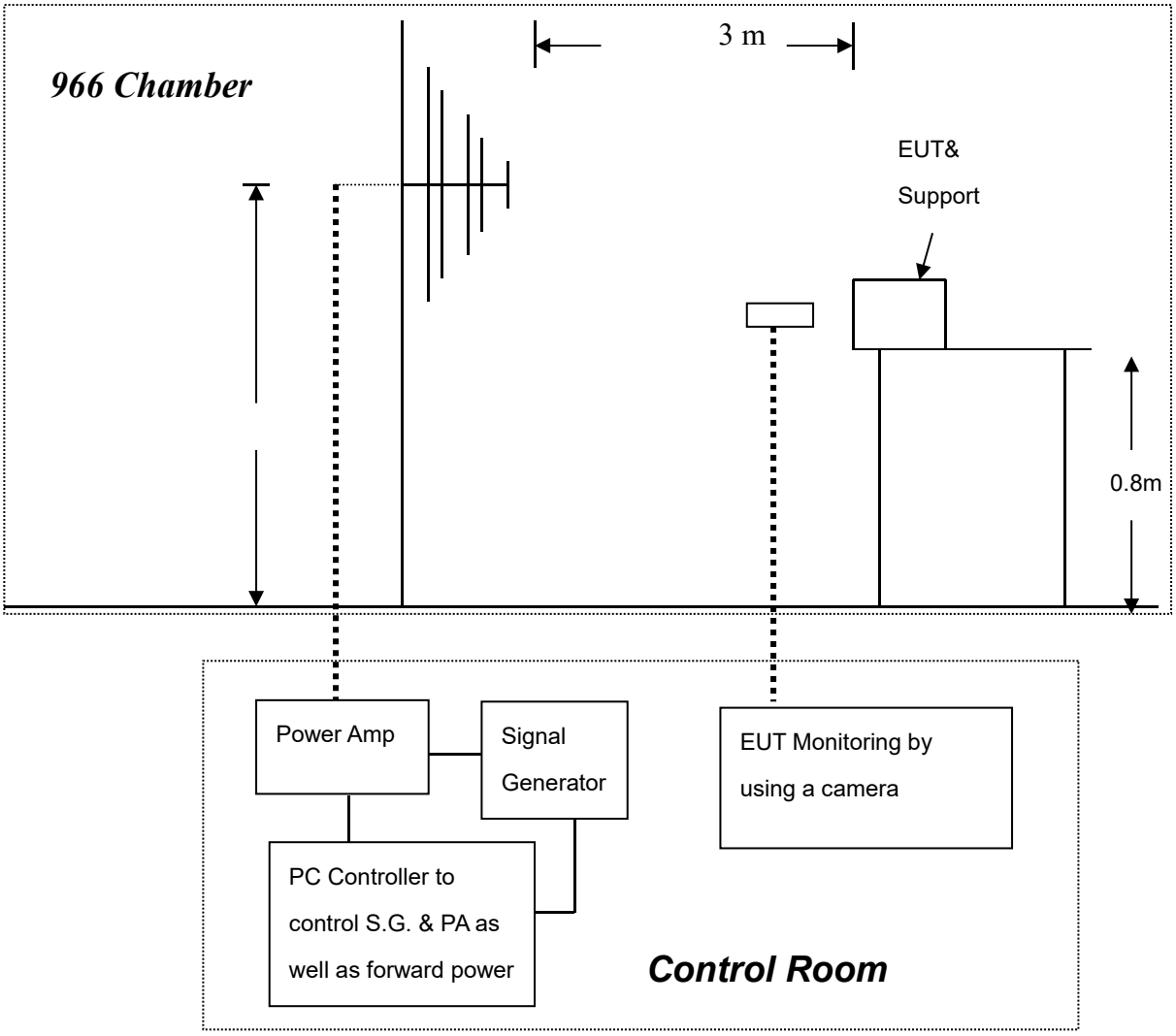


For the actual test configuration, please refer to the related item – Photographs of the Test Configuration.

Note:

TABLETOP EQUIPMENT

The EUT installed in a representative system as described in section 7 of EN 61000-4-3 was placed on a non-conductive table 0.8 meters in height. The system under test was connected to the power and signal wire according to relevant installation instructions.

FLOOR STANDING EQUIPMENT

The EUT installed in a representative system as described in section 7 of IEC 61000-4-3 was placed on a non-conductive wood support 0.1 meters in height. The system under test was connected to the power and signal wire according to relevant installation instructions.


This report is only responsible for the test results of the samples submitted for inspection, and is not responsible for the source of the samples submitted for inspection.
This report shall not be altered, increased or deleted. Without written approval of MG, this test report shall not be copied except in full and published as advertisement.

### 8.4.4.TEST RESULT

| Product | Emergency car light | Environmental Conditions | 23℃, 52 % RH, 101.2 kPa |
|---|---|---|---|
| Model | MO8678 | Tested By | Brian |
| Test mode | Lighting | Test Result | Pass |

| Frequency (MHz) | Polarity | Position | Field Strength (V/m) | Observation | Performance Criterion |
|---|---|---|---|---|---|
| 80 ~ 1000 | V&H | Front | 3 | Note ☒1 ☐2 ☐3 | A |
| 80 ~ 1000 | V&H | Rear | 3 | Note ☒1 ☐2 ☐3 | A |
| 80 ~ 1000 | V&H | Left | 3 | Note ☒1 ☐2 ☐3 | A |
| 80 ~ 1000 | V&H | Right | 3 | Note ☒1 ☐2 ☐3 | A |

Note: 1) There was no change compared with initial operation during the test.

2) During the test the luminous intensity change ,and after the test the luminous intensity can be restored to its initial value within 1 min.

3) During the test, the luminous intensity change and after the test the luminous intensity can return to normal within 30 min.


This report is only responsible for the test results of the samples submitted for inspection, and is not responsible for the source of the samples submitted for inspection.
This report shall not be altered, increased or deleted. Without written approval of MG, this test report shall not be copied except in full and published as advertisement.

## *8.5. ELECTRICAL FAST TRANSIENT (EFT)*

### 8.5.1.TEST SPECIFICATION

| | |
|---|---|
| **Basic Standard:** | EN 61000-4-4 |
| **Test Voltage:** | AC Power Line: ±1 kV<br>DC Power Line: ±0.5kV<br>Signal/Control Line: ±0.5 kV |
| **Polarity:** | Positive & Negative |
| **Impulse Frequency:** | 5 kHz |
| **Impulse Wave-shape:** | 5/50 ns |
| **Burst Duration:** | 15 ms |
| **Burst Period:** | 300 ms |
| **Test Duration:** | 2 mins |
| **Performance Criterion:** | B |

### 8.5.2.TEST PROCEDURE

EUT is placed on a 0.1 m tall wooden table.

EUT operate at normal mode, the transient/burst was 5/50 ns in accordance with EN 61000-4-4, both positive and negative polarity burst waveform were applied.

The duration time of each test line was 2 minutes.

### 8.5.3.TEST SETUP

The EUT installed in a representative system as described in section 7 of EN 61000-4-4.

For the actual test configuration, please refer to the related item – photographs of the test configuration.

### 8.5.4.TEST RESULT

N/A


This report is only responsible for the test results of the samples submitted for inspection, and is not responsible for the source of the samples submitted for inspection.
This report shall not be altered, increased or deleted. Without written approval of MG, this test report shall not be copied except in full and published as advertisement.

## *8.6. SURGE IMMUNITY TEST*

### 8.6.1.TEST SPECIFICATION

| | |
|---|---|
| **Basic Standard:** | EN 61000-4-5 |
| **Wave-Shape:** | Combination Wave<br>1.2/50 µs Open Circuit Voltage<br>8/20 µs Short Circuit Current |
| **Test Voltage:** | Power Port ~ Line to line: ±0.5 kV,<br>Line to ground: N.A<br>( to self-ballasted lamps and semi-luminaries; luminaires and independent auxiliaries which are less than 25 W)<br>Power Port ~ Line to line: ±1 kV, Line to ground: ±2 kV<br>(to luminaires and independent auxiliaries which are more than 25 W)<br>Road and street lighting equipment~ Line to line: ±2 kV, Line to ground: ±4 kV |
| **Surge Input/Output:** | Power Line: L-N / L-PE / N-PE |
| **Generator Source Impedance:** | 2 Ω between networks<br>12 Ω between network and ground |
| **Polarity:** | Positive/Negative |
| **Phase Angle:** | 90°(positive polarity pulses) / 270°(negative polarity pulses) |
| **Pulse Repetition Rate:** | 1 time / min. |
| **Number of Tests:** | 5 positive polarity pulses at the 90° phase angle, and 5 negative polarity pulses at 270° phase angle |
| **Performance Criterion:** | C |

### 8.6.2.TEST PROCEDURE

EUT is placed on a 0.1 m (table type equipment) / 0.8 m (floor type equipment) tall wooden table.

EUT operate at normal mode, two types of combination wave generator (1.2/50 us open-circuit voltage and 8/20 us short-circuit current) are applied to the EUT power supply terminals via the capacitive coupling network.

The power cord between the EUT and the coupling/decoupling network shall not exceed 2 m in length.


This report is only responsible for the test results of the samples submitted for inspection, and is not responsible for the source of the samples submitted for inspection.
This report shall not be altered, increased or deleted. Without written approval of MG, this test report shall not be copied except in full and published as advertisement.

### 8.6.3.TEST SETUP

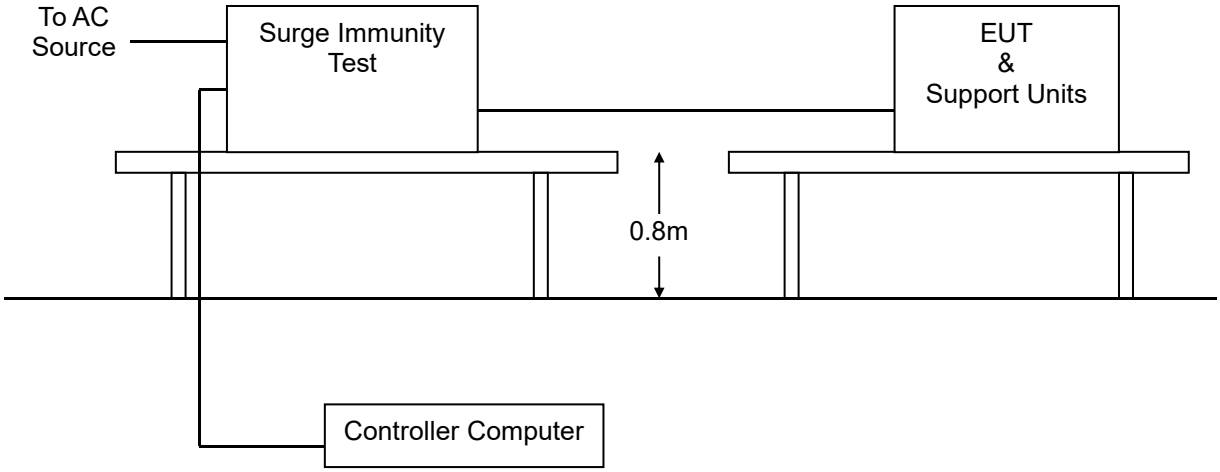


For the actual test configuration, please refer to the related item – Photographs of the Test Configuration.

### 8.6.4.TEST RESULT

N/A


This report is only responsible for the test results of the samples submitted for inspection, and is not responsible for the source of the samples submitted for inspection.
This report shall not be altered, increased or deleted. Without written approval of MG, this test report shall not be copied except in full and published as advertisement.

## *8.7. CONDUCTED RADIO FREQUENCY DISTURBANCES (CS)*

### 8.7.1.TEST SPECIFICATION

| | |
|---|---|
| **Basic Standard:** | EN 61000-4-6 |
| **Frequency Range:** | 0.15 MHz ~80 MHz |
| **Field Strength:** | 3 V |
| **Modulation:** | 1 kHz Sine Wave, 80 %, AM Modulation |
| **Frequency Step:** | 1 % of preceding frequency value |
| **Coupled cable:** | Power Mains, Shielded |
| **Coupling device:** | CDN-M3/2 (3 wires/2 wires) |
| **Performance Criterion:** | A |

### 8.7.2.TEST PROCEDURE

The EUT shall be tested within its intended operating and climatic conditions.
The test shall performed with the test generator connected to each of the coupling and decoupling devices in turn, while the other non-excited RF input ports of the coupling devices are terminated by a 50 Ω load resistor.
The frequency range was swept from 150 kHz to 80 MHz, using the signal level established during the setting process and with a disturbance signal of 80 % amplitude. The signal was modulated with a 1 kHz sine wave, pausing to adjust the RF signal level or the switch coupling devices as necessary. The sweep rate was 1.5 x $10^{-3}$ decades/s. Where the frequency range is swept incrementally, the step size was 1 % of preceding frequency value the dwell time of the amplitude modulated carrier at each frequency was 0.5 s.

### 8.7.3.TEST SETUP

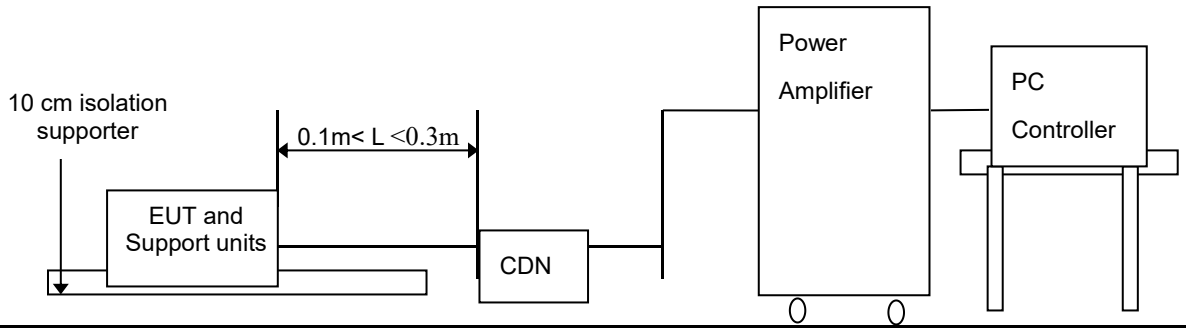


For the actual test configuration, please refer to the related item – Photographs of the Test Configuration
Note: 1) The EUT is setup 0.1 m above Ground Reference Plane

2) All relevant cables shall be provided with the appropriate coupling and decoupling devices at a distance between 0.1 meters and 0.3 meters from the projected geometry of the EUT on the ground reference plane.

### 8.7.4.TEST RESULT

N/A


This report is only responsible for the test results of the samples submitted for inspection, and is not responsible for the source of the samples submitted for inspection.
This report shall not be altered, increased or deleted. Without written approval of MG, this test report shall not be copied except in full and published as advertisement.

## *8.8. POWER FREQUENCY MAGNETIC FIELD*

### 8.8.1.TEST SPECIFICATION

| | |
|---|---|
| **Basic Standard:** | EN 61000-4-8 |
| **Frequency Range:** | 50 /60 Hz |
| **Field Strength:** | 3A/m |
| **Observation Time:** | 5 minutes |
| **Inductance Coil:** | Rectangular type, 1 m x 1 m |
| **Performance Criterion:** | A |

### 8.8.2.TEST PROCEDURE

The equipment is configured and connected to satisfy its functional requirements. It shall be placed on the GRP with the interposition of a 0.1 m-thick insulating support.

The equipment cabinets shall be connected to the safety earth directly on the GRP via the earth terminal of the EUT.

The power supply, input and output circuits shall be connected to the sources of power supply, control and signal.

The cables supplied or recommended by the equipment manufacturer shall be used. 1 meter of all cables used shall be exposed to the magnetic field.


This report is only responsible for the test results of the samples submitted for inspection, and is not responsible for the source of the samples submitted for inspection.
This report shall not be altered, increased or deleted. Without written approval of MG, this test report shall not be copied except in full and published as advertisement.

## 8.8.3.TEST SETUP

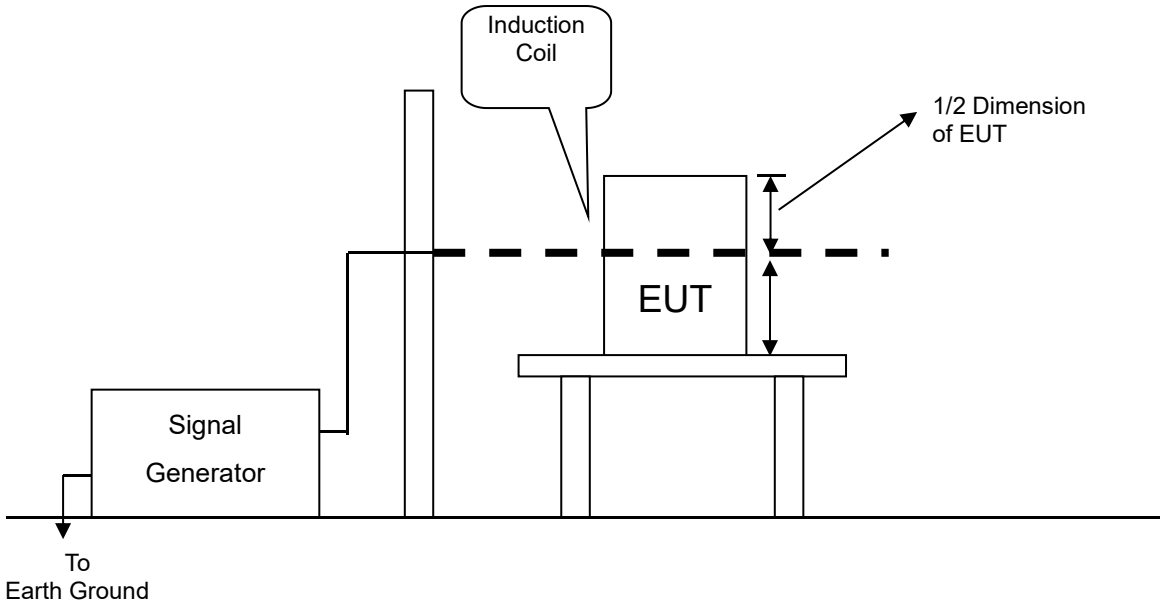


For the actual test configuration, please refer to the related item – Photographs of the Test Configuration
Note:

TABLETOP EQUIPMENT
The equipment shall be subjected to the test magnetic field by using the induction coil of standard dimension (1 m x 1 m). The induction coil shall then be rotated by 90 degrees in order to expose the EUT to the test field with different orientations.

FLOOR-STANDING EQUIPMENT
The equipment shall be subjected to the test magnetic field by using induction coils of suitable dimensions. The test shall be repeated by moving and shifting the induction coils, in order to test the whole volume of the EUT for each orthogonal direction. The test shall be repeated with the coil shifted to different positions along the side of the EUT, in steps corresponding to 50 % of the shortest side of the coil. The induction coil shall then be rotated by 90 degrees in order to expose the EUT to the test field with different orientations.

## 8.8.4.TEST RESULT

N/A


This report is only responsible for the test results of the samples submitted for inspection, and is not responsible for the source of the samples submitted for inspection.
This report shall not be altered, increased or deleted. Without written approval of MG, this test report shall not be copied except in full and published as advertisement.

## *8.9. VOLTAGE DIP & VOLTAGE INTERRUPTIONS*

### 8.9.1.TEST SPECIFICATION

| | |
|---|---|
| **Basic Standard:** | EN 61000-4-11 |
| **Test Duration Time:** | 3 test events in sequence |
| **Interval Between Event:** | 10 seconds |
| **Phase Angle:** | 0° |
| **Test Cycle:** | 3 times |
| **Performance Criterion:** | 70% $U_T$ / 10P, Criterion: B |
| | 0% $U_T$ / 0.5 P, Criterion: B |

### 8.9.2.TEST PROCEDURE

The EUT and support units were located on a wooden table, 0.8 m away from ground floor.
Setting the parameter of tests and then perform the test software of test simulator.
Changes to the voltage level shall occur at 0 degree crossing point in the a.c. voltage waveform.
Record the test result in test record form.

### 8.9.3.TEST SETUP

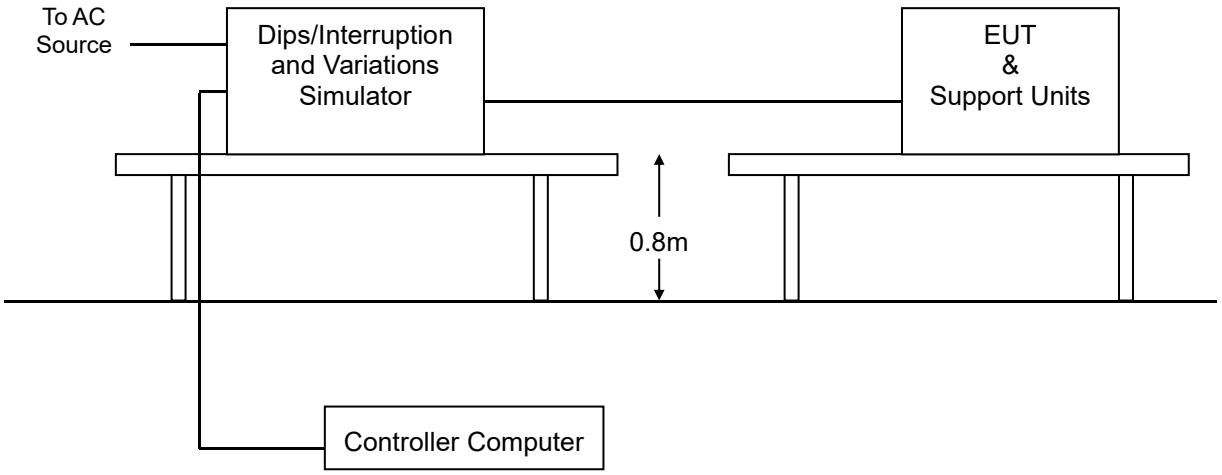


For the actual test configuration, please refer to the related item – Photographs of the Test Configuration.

### 8.9.4.TEST RESULT

N/A


This report is only responsible for the test results of the samples submitted for inspection, and is not responsible for the source of the samples submitted for inspection.
This report shall not be altered, increased or deleted. Without written approval of MG, this test report shall not be copied except in full and published as advertisement.

# 9. PHOTOGRAPHS OF THE TEST CONFIGURATION

RADIATED EMISSION TEST

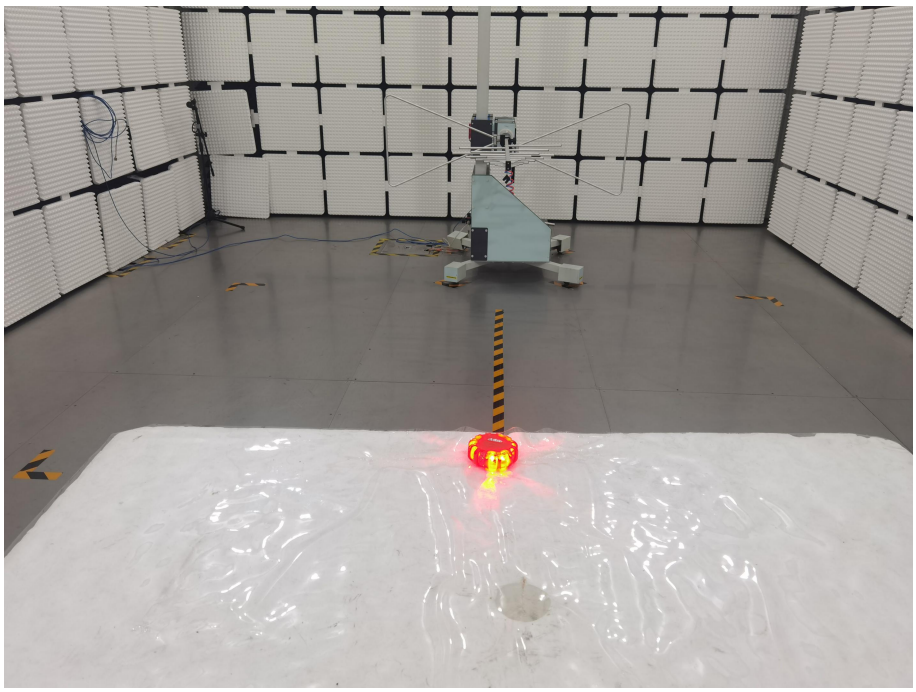

ESD TEST

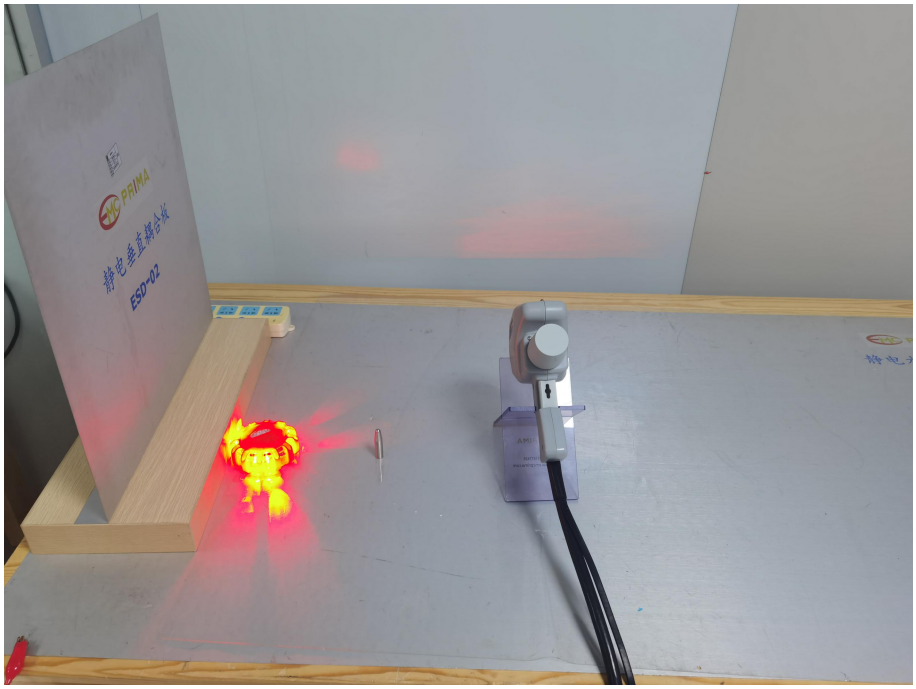



This report is only responsible for the test results of the samples submitted for inspection, and is not responsible for the source of the samples submitted for inspection.
This report shall not be altered, increased or deleted. Without written approval of MG, this test report shall not be copied except in full and published as advertisement.

# 10. PHOTOGRAPHS OF EUT

Detail of:

☐ front

☐ rear

☐ right side

☐ left side

☐ top

☐ bottom

☐ internal

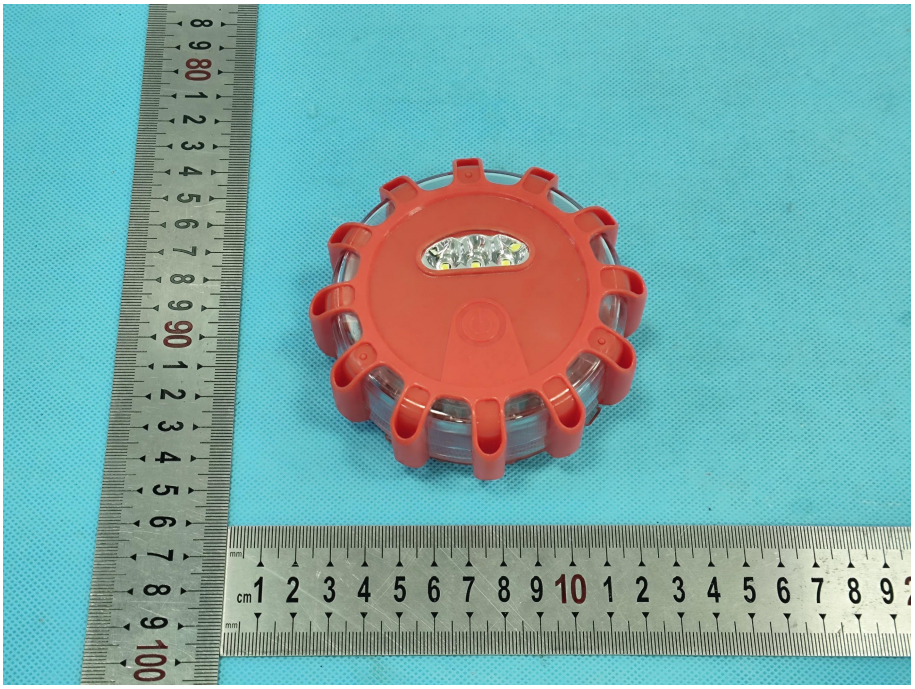

Detail of:

☐ front

☐ rear

☐ right side

☐ left side

☐ top

☐ bottom

☐ internal

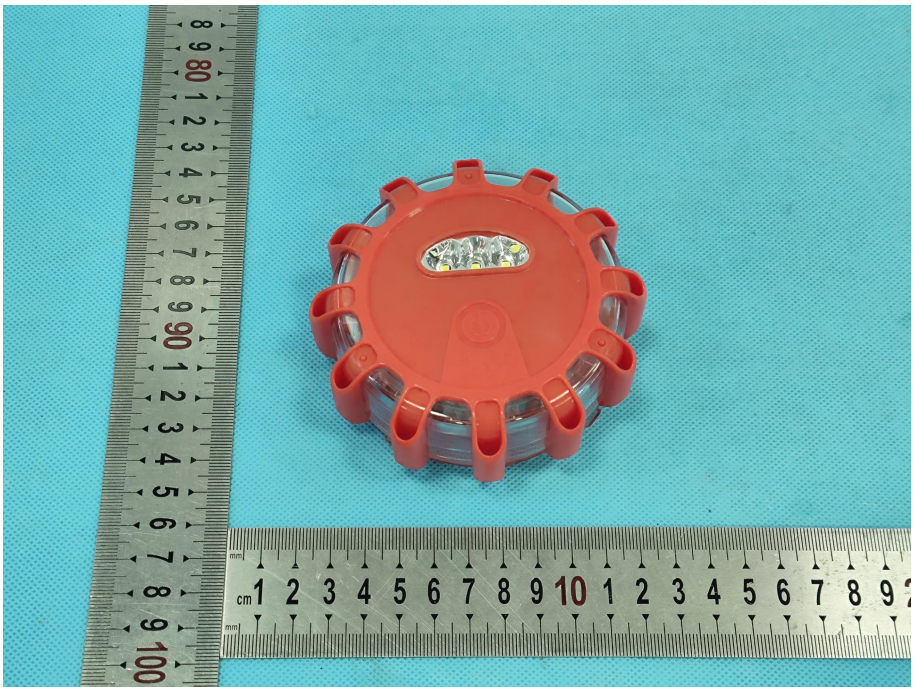


This report is only responsible for the test results of the samples submitted for inspection, and is not responsible for the source of the samples submitted for inspection.
This report shall not be altered, increased or deleted. Without written approval of MG, this test report shall not be copied except in full and published as advertisement.

Detail of:

☐ front

☐ rear

☐ right side

☐ left side

☐ top

☐ bottom

☐ internal

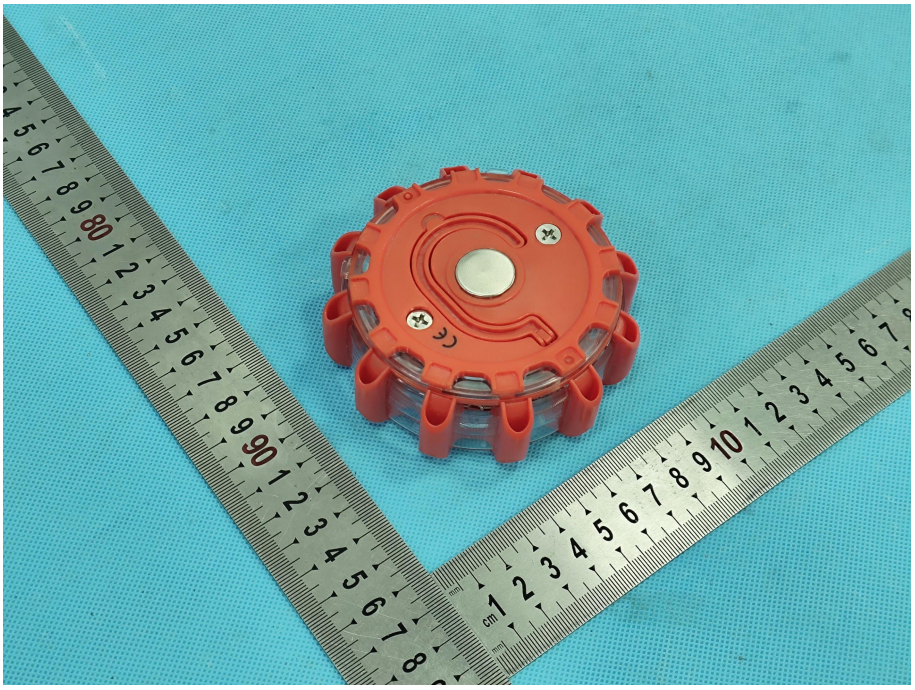

Detail of:

☐ front

☐ rear

☐ right side

☐ left side

☐ top

☐ bottom

☐ internal

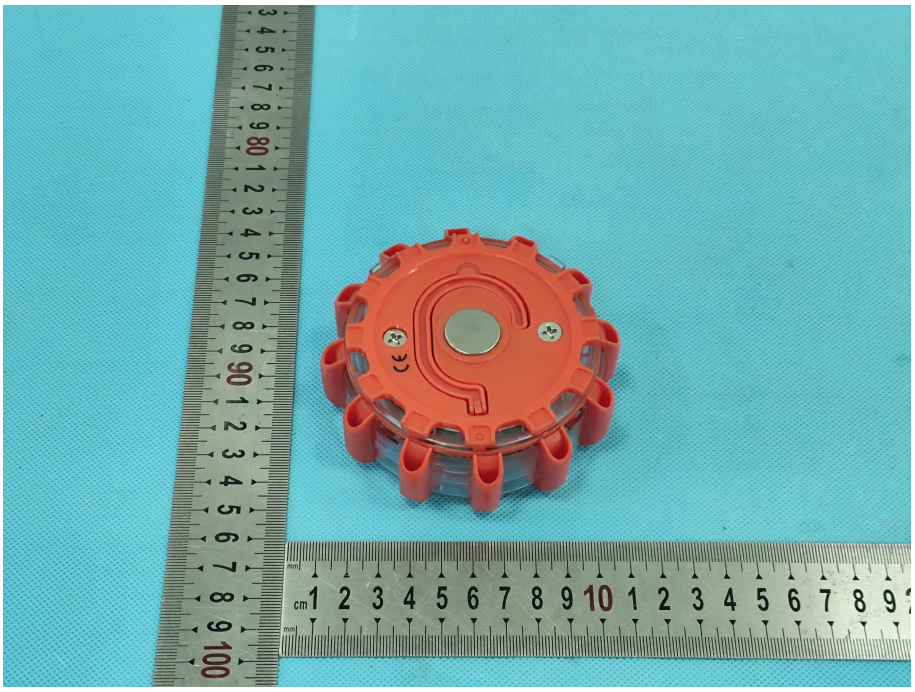


This report is only responsible for the test results of the samples submitted for inspection, and is not responsible for the source of the samples submitted for inspection.
This report shall not be altered, increased or deleted. Without written approval of MG, this test report shall not be copied except in full and published as advertisement.

Detail of:

☐ front

☐ rear

☐ right side

☐ left side

☐ top

☐ bottom

☐ internal

Detail of:

☐ front

☐ rear

☐ right side

☐ left side

☐ top

☐ bottom

☐ internal

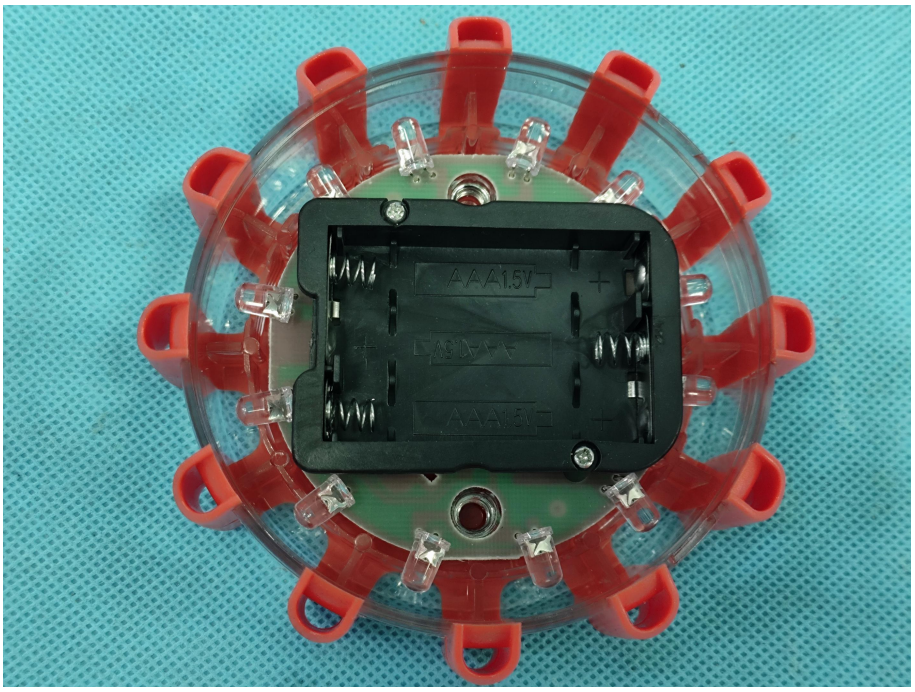



This report is only responsible for the test results of the samples submitted for inspection, and is not responsible for the source of the samples submitted for inspection.
This report shall not be altered, increased or deleted. Without written approval of MG, this test report shall not be copied except in full and published as advertisement.

Detail of:

☐ front

☐ rear

☐ right side

☐ left side

☐ top

☐ bottom

☐ internal

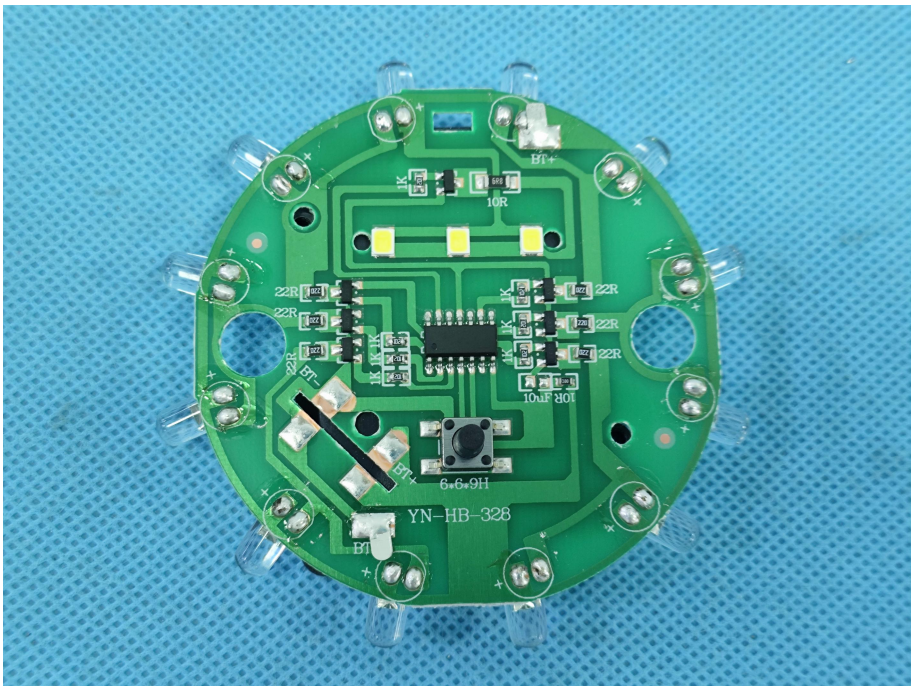


Detail of:

☐ front

☐ rear

☐ right side

☐ left side

☐ top

☐ bottom

☐ internal

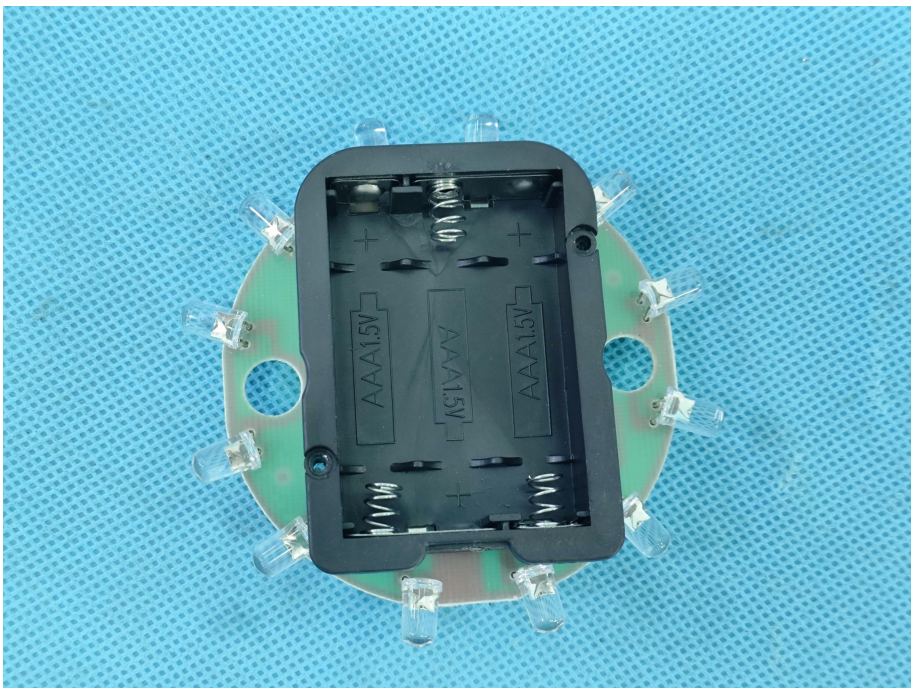


**— End of report —**


This report is only responsible for the test results of the samples submitted for inspection, and is not responsible for the source of the samples submitted for inspection.
This report shall not be altered, increased or deleted. Without written approval of MG, this test report shall not be copied except in full and published as advertisement.